DT851

Door Station

User Manual

DT851

DT851F

Please read this manual carefully before using the product you purchase, and keep it well for future use.We reserve the right to modify the specification in this manual at any time without notice.

1.Parts and Functions

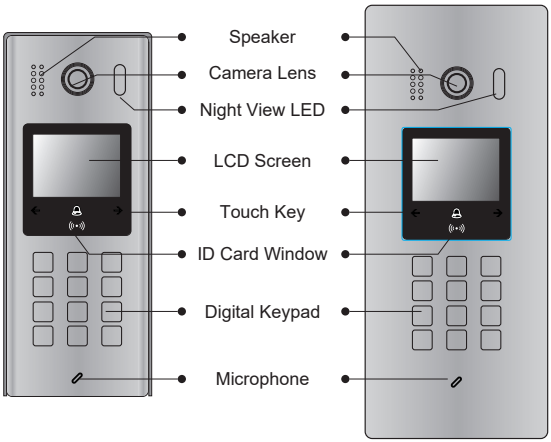

2. Terminal Descriptions

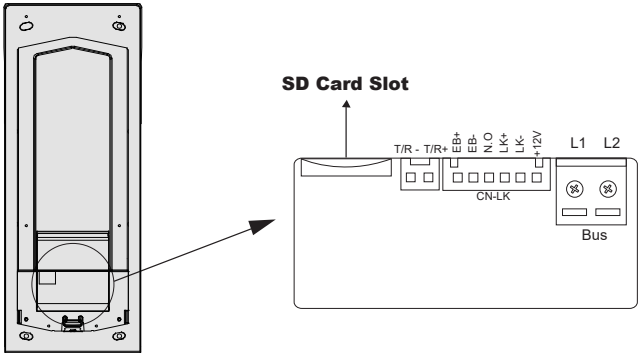

- **+12V:** 12VDC power output.
- **LK-(GND):** Power ground.
- **LK+(COM):** Common contact of the Relay .
- **NO.:**Normally open contact of the Relay(refer to DT technical guide for Lock connection detail informations).
- **EB+:** Exit button connection port.
- **EB-:** Exit buton connection port.
- **T/R-:** USB-RS485 communication terminal negative.
- **T/R+:** USB-RS485 communication terninal positive.
- **Bus(**L1,L2**):** non-polarity bus line.

3.Door Station Mounting

Surface mounting

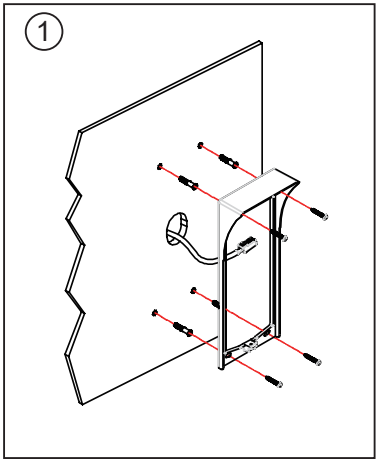

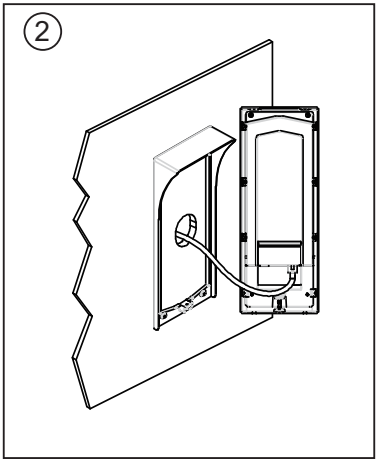

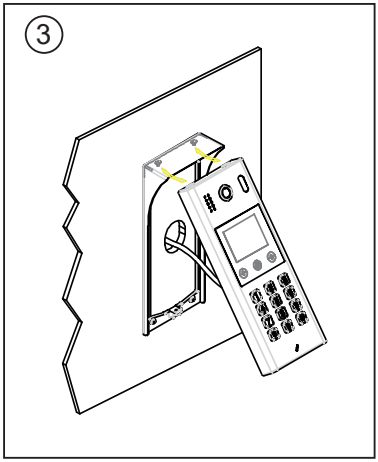

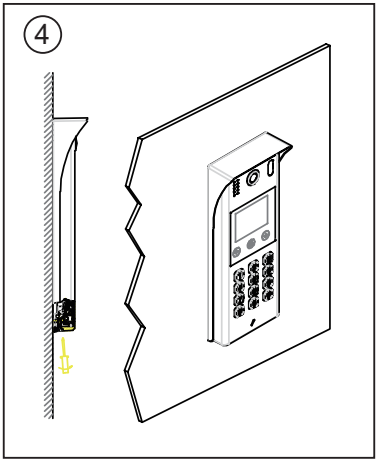

1. Drill holes in the wall to match the size of screw stoppers, then attach the rainy cover and main unit to the wall, and the distance between the top of main unit and rain cover should be not less than 3mm.

2. Connect the cable correctly.

3. Install the door station, hook up from the top with the rain cover and then amount the door panel.

Flush mounting

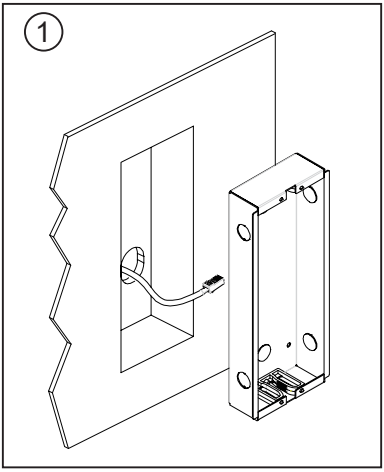

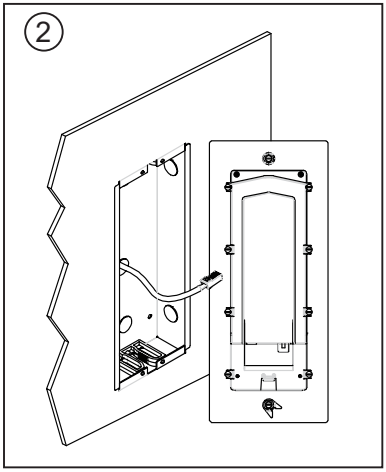

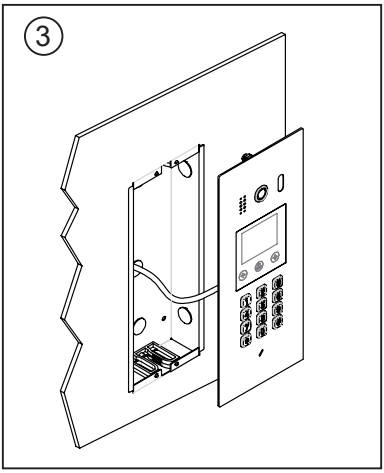

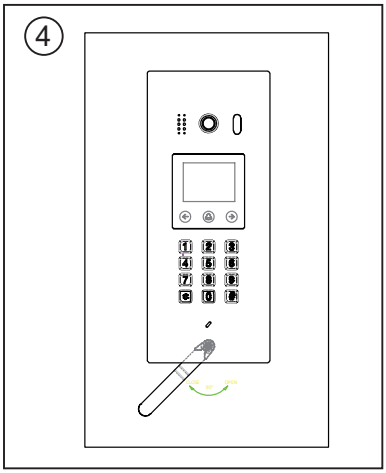

1. Drill a hole in the wall to match the size of the mounting box and attach to the wall.
2. Connect the cable correctly and make sure ratchet bolt on the bottom is in “Open” position.
3. Make sure the install is firmly, and use the wrench tool to locking the ratchet to “Close” position.

4. System Connection

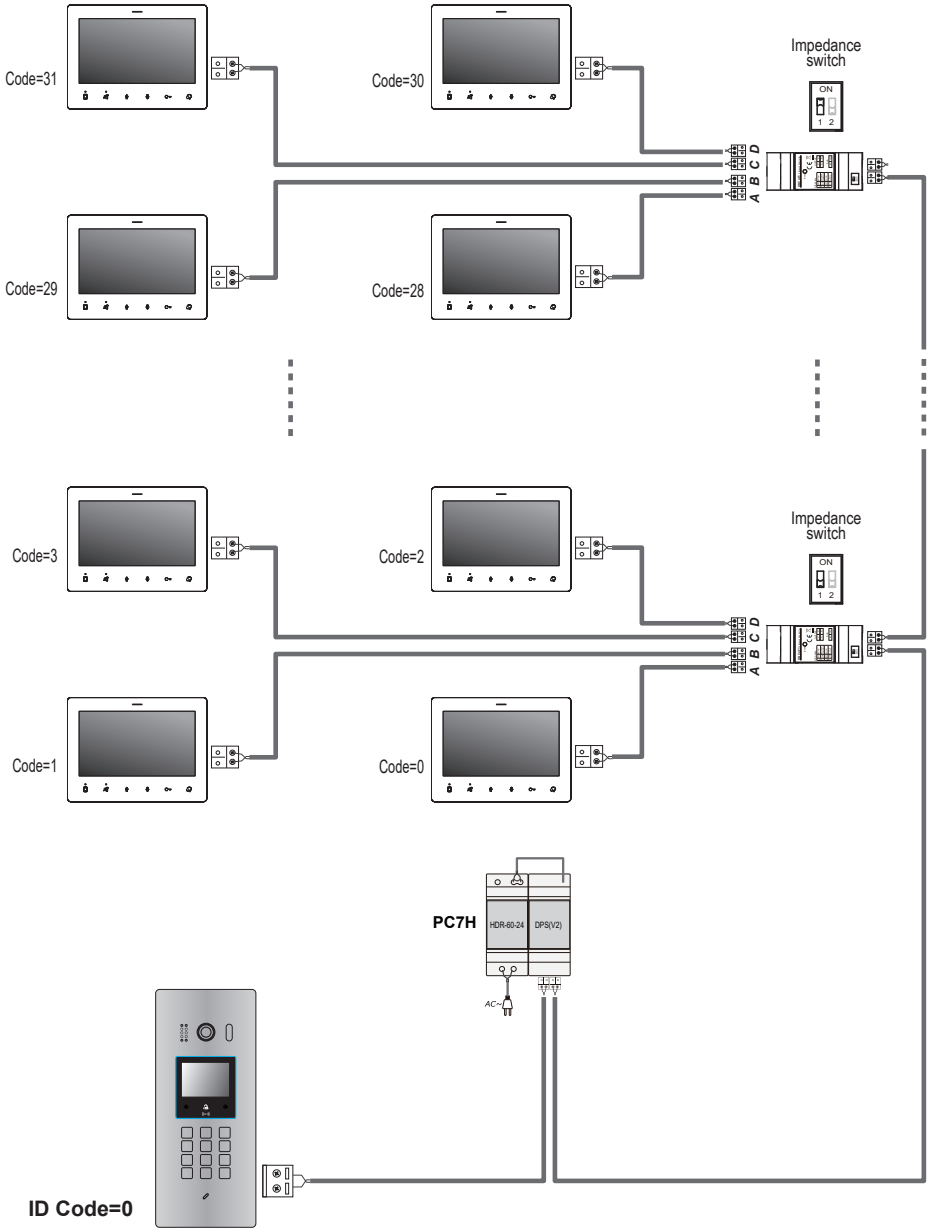

NOTE:Here we take DF7(the monitor) for example.

5. Door Lock Connections

1. Internal Power Supply Mode

Use the power of the system to supply for the electronic lock, so that the lock can be connected to the door station directly, without an additional power supply for the electronic lock. Note that the door station can only output 12Vdc power, therefore the kind of lock is limited.

- The rated power of the lock must be less than 12Vdc 300mA when using internal power supply mode
- The GND must connect to the negative of the lock, and the COM connect to the positive .
- If different unlocking time is needed to be configured, change the *Unlock Timing* on door station.(In debug state, press [1 #] --> [1] Installer Setup--> [2]Unlock Timing)

Connection for Power--off-to-Unlock type:

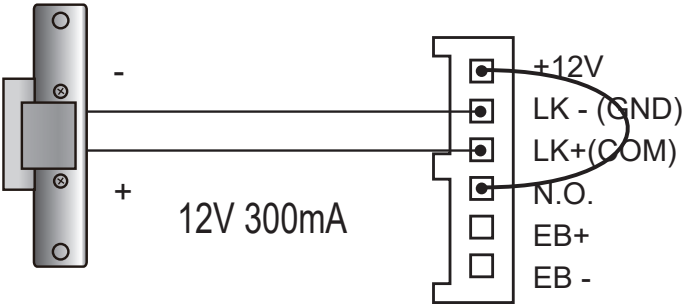

set to Normally Closed on the
Unlock Relay mode

2. External Power Supply Mode

When the electronic lock is over 12 Vdc, additional power supply for the lock is needed.

- The power supply for the lock must be less than 48Vdc 1.5A.
- If different unlocking time is needed to be configured, change the *Unlock Timing* on door station.(In debug state, press [1 #] --> [1] Installer Setup--> [2]Unlock Timing)

Connection for Power--off-to-Unlock type:

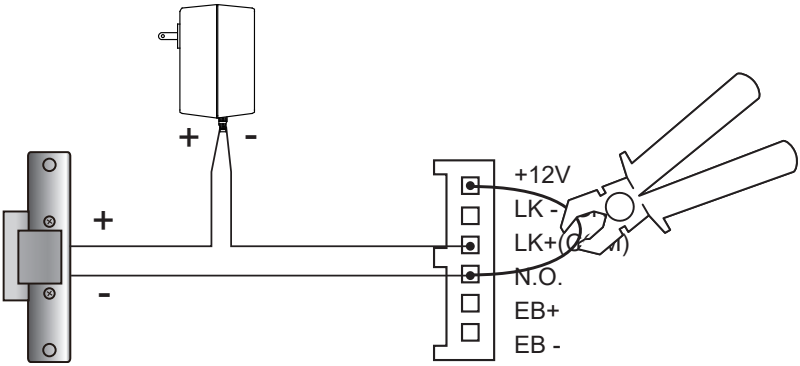

set to Normally Closed on the Unlock Relay mode

Note: Cut off this line when using external power supply

6. Door Station Configurations

1. About room code(address):

Room Code(also called room address) is a code assigned to each monitor, to identify different monitors; each monitor have a unique room code in one buidling.The room Code is stored in each Monitor's inner EEPROM memory, and does not lose even the monitor is power off.

2. About Debug State:

The Debug State is your starting point for using all the applications on DT851.

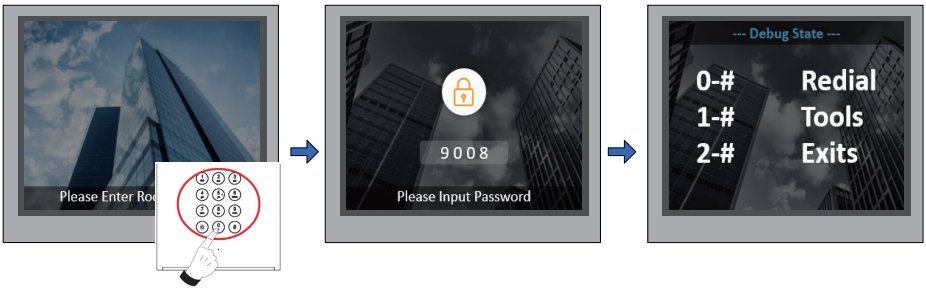

When Door Station is in standby, press '#' key

input '9008', then input the Admin Code.(66666666 by default)

Debug State menu is launched

Press "2#" key to exit out the debug state.

3. About Debug Tools:

During working at Debug State,press "1#" to enter tools page,Debug Tools overviews is shown as below:

Table 1:

Item	Submenu
1. Installer Setup	1. ID Code [0] 2. Unlock Timing [01] 3. Unlock Output [0] 4. Monitor Timing [600] 5. Doorplate Mode [1] 6. Waiting Timing [040] 7. Talking Timing [090] 8. Installer Code ... 9. Default ...
2. Setup	1. Language [0] 2. Tone Select [01] 3. Tone Volume [3] 4. Unlock Code [1111] 5. Work Mode [0] 6. Clock ... 7. Setup Code ... 8. About ... 9. Default ...
3. Card Manage	1. Add Card ... 2. Delete By Card 3. Delete By M.code 4. Cards Information 5. Format
4. Online Monitors	To search the online monitors,input the monitor code number to search
5. Online Devices	To search the online door stations.Max.4 door station can be searched
6. FE Camera Setup	To setup the fisheye camera auto zoom in function

Basic Tools Detail:

Table 2(Installer Setup):

Item	Description	Factory set
ID Code	If only one door station is installed in this building, set to 0; If multi door stations are installed, primary door station must be set to 0, and other slave door stations must be set from 1 to 3. Note that max. 4 door stations are available in one building	[0] Single
Unlock Timing	To set the time that how long the door keeps open when door is released. Range from 01 to 99 seconds.	[01] 1 seconds
Unlock Output	To set the unlock mode to match the corresponding lock. Range from 0 to 1. 0:Power-on-to-Unlock Mode(Normally Open Mode) 1:Power-off-to-Unlock Mode(Normally Closed Mode)	0
Monitor Timing	To show the monitor time,Range from 6s to 600s	600s
Doorplate Mode	***Auto Call:*** Range from 0 to 1. 0:after a complete input the call codes, automatically dialing; 1:required to input "#" to confirm dialing after input a complete call codes. ***Building No.:*** 0~4 digit for the Building No., 0 means without Building No. the door station will be only call to local monitor. ***Room No.:*** 2~4 digit for the Room No., at least 2 digit for the Room No. to call. ***Input No.:*** 2~8 maximum digit for input codes, at least 2 digit. ***Call Mode:*** Reserve, always set it to 2.	[1]
Waiting Timing	To show the calling wait time,Range from 6s to 600s	40s
Talking Timing	To show the limitation time of talking,Range from 6s to 600s	90s
Installer Code ...	To change door station administrator code	[66666666]
Default ...	Note this operation is irreversible. Once restore is activated, all parameters will return to factory default setting except the information of access card.	

Table 3(Setup):

Item	Description	Factory set
Language	reserved.	0
Tone Select	Select the chime of Door Station in calling wait state.	01
Tone Volume	Adjust the tone volume for dooor station in calling.Range from 01~15	3
Unlock Code	To change unlock code in Common Code Unlock mode, in 4-digits format. 1111 is the default unlock code.	1111
Work Mode	0: Standard work mode; 1: DJ work mode; 2: Router work mode; 3. Gateway work mode.	0
Clock ...	To set date and time. Date format:if set to 0,date format is DD/MM/YY,if set to 1,date format is MM/DD/YY. Time format: if set to 0,time format is 24 hour standard.If set to 1,time format is12 hour standard.	
Setup Code	To change the Program Code.	[88888888]
About ...	1. Hardware version---To show the Door Station(including ACS) hardware information 2. Software version ---To show the Door Station(including ACS) software information 3. Manufacture Date---To show the manufacturing date 4. Dialing Counts---To show the call operation counts 5. Calls Counts---To show the established calling counts 6. Unlock Counts---To show the unlock operation counts	
Default ...	Restore all Setup parameters to factory default setting,Please note that this operation is an irreversible	

Table 4(Card Manage):

Item	Description	Factory set
Add Card ...	To add the user card	
Delete By Card	To delete card by user card	
Delete By M.code	To delete card by room code	
Cards Information	To show the informations about cards	
Format	To format informations about cards	

4. How to use code unlock function:

Please refer to the following operations:

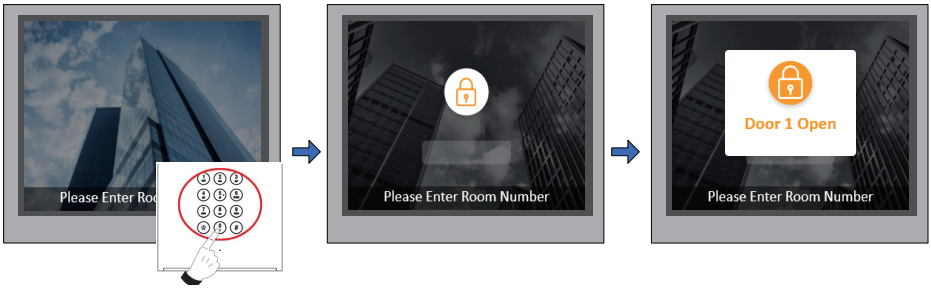

When the Door Station is in standby, Press “#”

Input 4 digits Unlock Code directly

If verified correctly, door open

5. Change Unlcok Code:

If door station runs as Debug State, you can press “1#” to activate Tools Menu, then select “2” to enter setup page,then select 4 item.If it runs as Normal State, follow these steps:

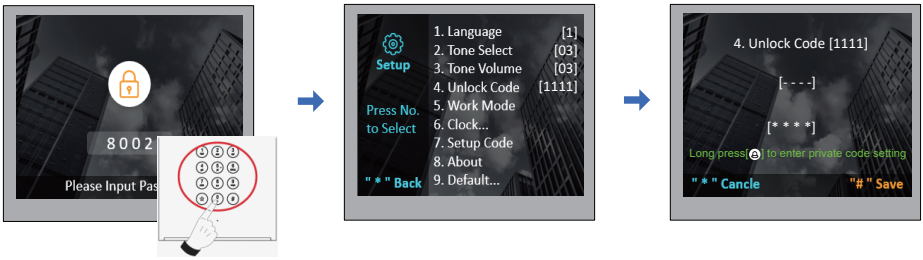

Press “#”,Input “8002”, then input Setup Code or Admin Code(88888888 or 66666666 by default)

Press “4” to enter unlock code item.

Input 4 digits number, then press “#” to update

At this time, you can set the private unlock code, follow these steps:

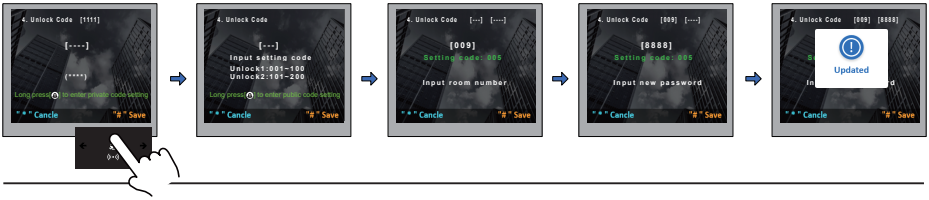

Long press button.

Input setting code(001~200), then press “#“ to save.

Input room number, then press “#“ to save.

Input new password, then press “#“ to save.

Use Lock2's unlock password for Lock1. By default, codes 001-100 are for Lock1, and codes 101-200 are for Lock2.
If Lock2 is not used, you can assign its codes to Lock1 to increase the available codes.

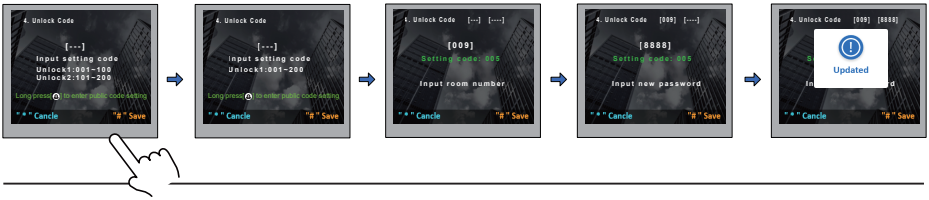

Long press button.

Input setting code(001~200), then press “#“ to save.

Input room number, then press “#“ to save.

Input new password, then press “#“ to save.

6. User Card Management:

This section explains how to configure the key fob function on DT851, The key fob is used to open the lock. Total 640 key fobs can be registered with one door station. When swiping the fob to the door station, the distance must be less than 3 centimeter.

Key Fobs must be registered on the Door station that can be used to open the door.

Register the Key Fobs:

All the registered key fobs are called User Cards/User Key Fobs. New fobs/cards need to be registered one by one to the Door station to become a valid User Card/User Key Fob; and every User Card/User Key Fob is related to a certain Monitor Address (Flat code).

When the Doors tation is standby, press [#] --> [9008] -->Password([66666666 by default]) to get into the Debug Mode Menu, then Press [1 #] --> [3] Card Manage -->[1] Add Card to get into the Add Card page. Please see the followings.

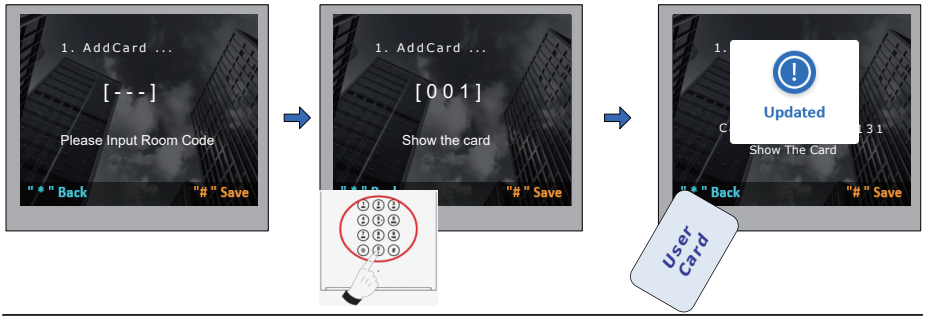

Enter Add Card menu, and Room Code is asked.

Input Room Code

Read the card to be authorized

Delete user cards:

Registered User Cards/Key Fobs can be deleted from the Door station,once doing the delete operation,the card/key fobs can not open the door anymore. They can also be re-registered again to become a valid User Card/User Key Fob. There are two ways to delete User Cards/ User Key Fobs:

1. Delete by card: show the unwanted card(s) when the Door station is in Delete Card Mode
2. Delete by room number: delete all the registered User Cards related to that room number.

Delete By Card:

In Debug State , Press [1 #] --> [3] Card Manage -->[2] Delete By Card to enter Delete by Card page.as shown on the right, then show the cards you want to delete one by one.

Delete by Room Number:

In Debug State , Press [1 #] --> [3] Card Manage -->[3] Delete By M.Code to enter Delete by M.Code page.as shown on the right, then Input the Room Code, press "#" to confirm; all associated cards will be deleted.

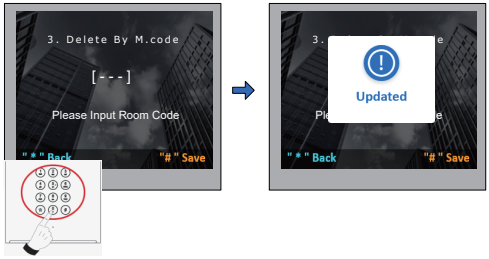

Card information:

Enter Card Information page, and the screen will display the authorized User Cards count, and card read access events count.

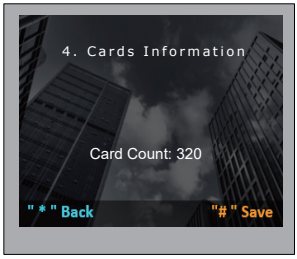

Format:

Enter Card Format page, a password will be asked,input 8 digits installer password (66666666 by default),then press" #" key to save,format operation is activated.all card information will be cleared.

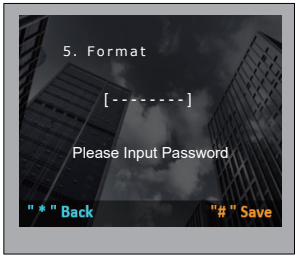

7. Specification

- Power supply: DC24~30V
- Camera Lens: Star light fisheye camera, horizontal 170 degree
- Power consumption: Standby 40mA; Working status 125mA.(28V)
- Screen: 2.8 inch TFT
- Video signal: CCIR/EIA Optional
- Wiring: 2 wires, non-polarity
- Dimension: 263(H)×114(W)×42.5(D)mm(Surface)
  316(H)×133(W)×46(D)mm(Flush)

System will stand in variable external temperature from 5-45% Celsius

System will stand in voltage power variable for 10% +/-

Anti-vandal